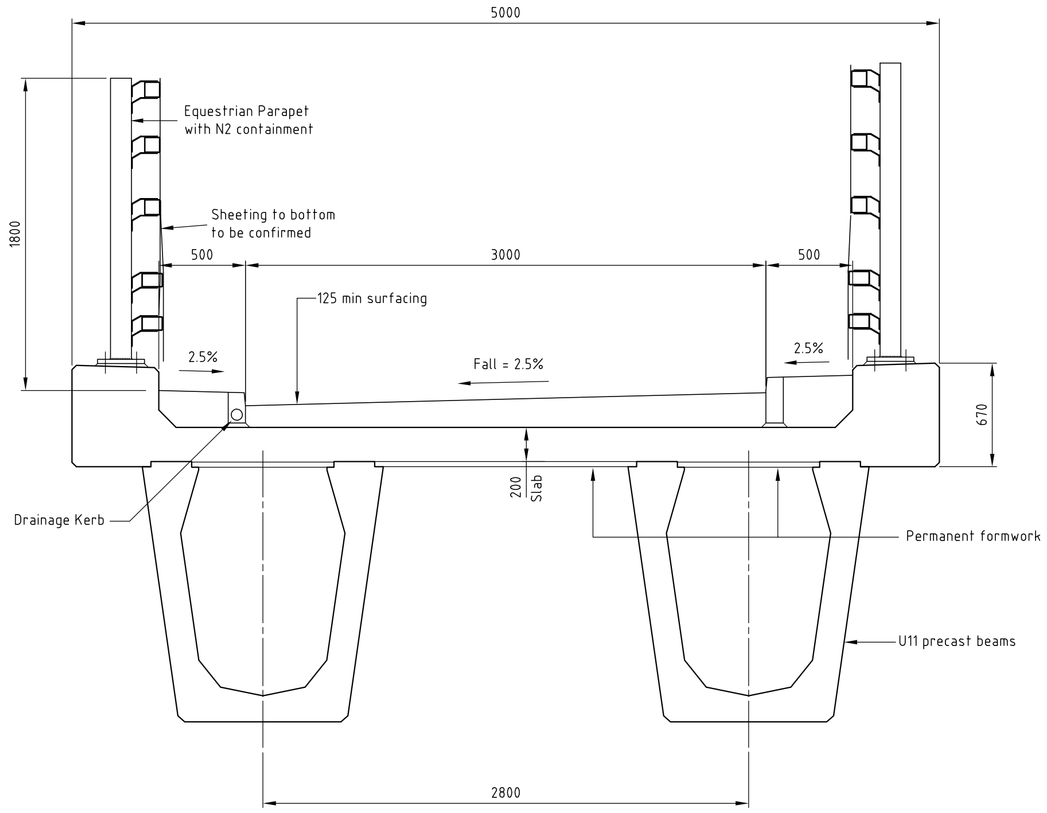

SECTION 1-1

(1:25)

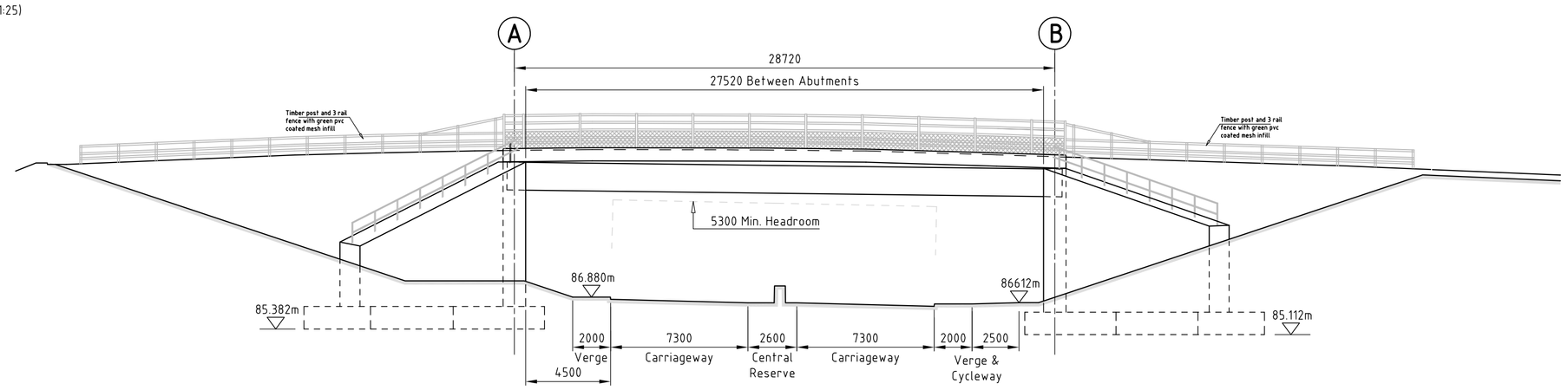

ELEVATION ON A-A

(1:200)

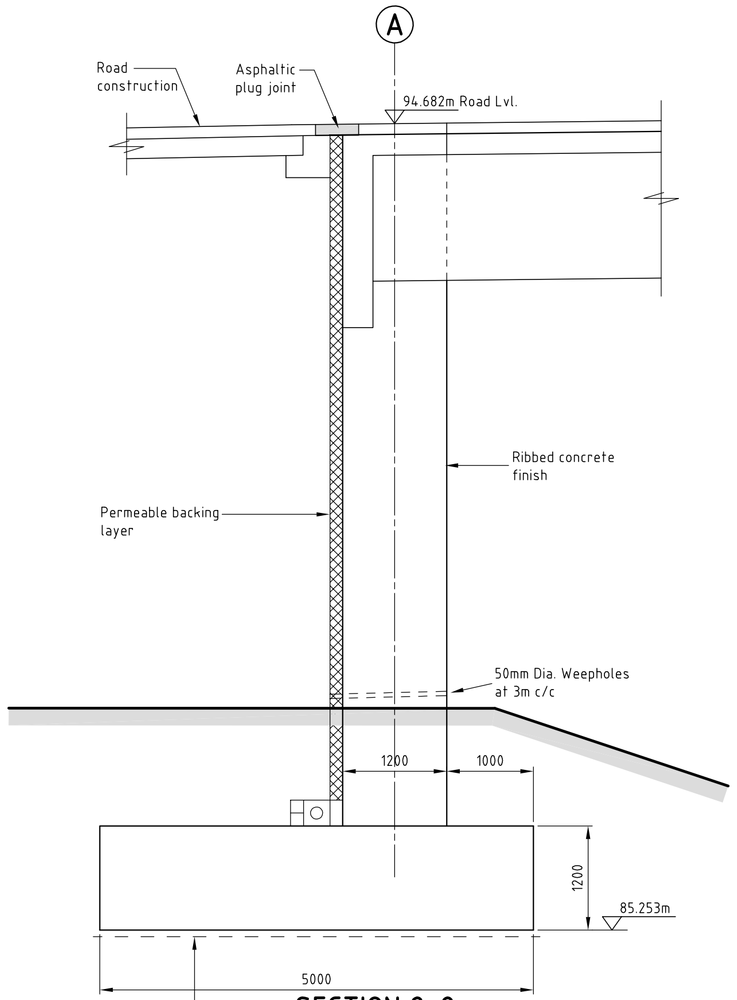

SECTION 2-2

(1:50)

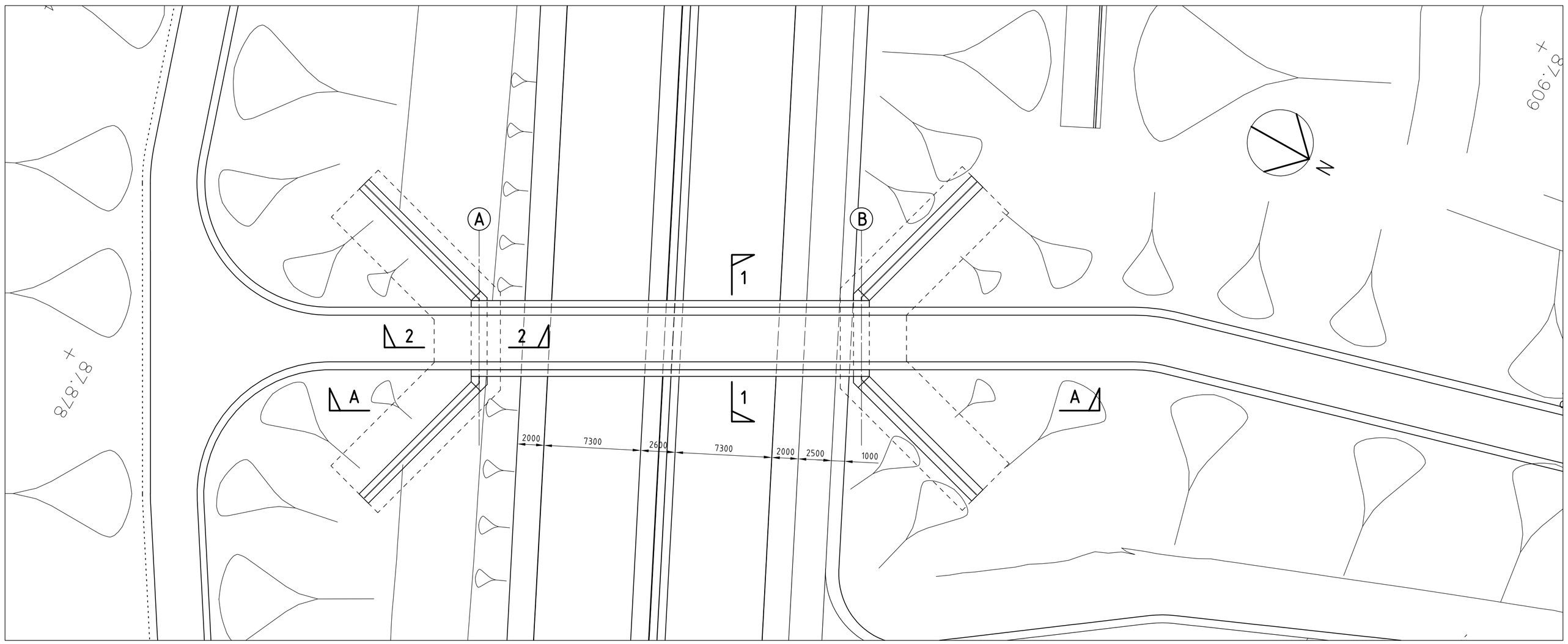

PLAN

(1:200)

This map is reproduced from Ordnance Survey material with the permission of Ordnance Survey on behalf of the Controller of Her Majesty's Stationery Office © Crown copyright.Unauthorised reproduction infringes Crown copyright and may lead to prosecution or civil proceedings. Stockport Metropolitan Borough Council 100019571 2010

NOTES

1. This drawing has been produced based on the latest MX highway model - Draft Design Freeze DF7, as provided by the client (July 2013).
2. This drawing has been produced mainly for the purpose of preliminary design and planning.
3. Only one option has been considered for this location as per client's instructions.
4. Levels are in metres and above Ordnance Datum.
5. All dimensions are in millimetres.
6. The option shown in this drawing is not for construction
7. The foundation type shown on the drawing is based on the latest available geotechnical information.
8. Basic preliminary design has been undertaken to determine the geometry of the section sizes as per client's instruction.
9. Concrete strengths:-

Precast panel	C32/ 40
Abutment base	C32/ 40
Abutment stem	C40/ 50
Deck slab	C40/ 50
Parapet edge beams	C40/ 50
Precast beams	C50/ 60

10. Permanent formwork is required.
11. Concrete finishes to be as per MCHW specification series 1700 U.N.O. :-

Burried foundations :	F1, U1.
Abutment :	F1.
Buried face of abutment :	F1.
Waterproofing :	F4.
Precast beams :	F5.
Precast concrete panel	F4.
Parapet edge beam :	F3, U3.
Deck slab top surface :	U4.

Rev.	Drawn	Checked	Date	Revision Details
C	SPH	MM	12.09.13	ISSUED FOR PLANNING
B	SPH	N.S.	02/09/13	BRIDGE LOCATION AND DESIGN REVISED. ROAD ALIGNMENT UPDATED.
A	SPH	N.A.	18/03/13	REVISED INCORPORATING CLIENTS COMMENTS
-	SPH	NS	15/5/12	Elevation & sections amended.

south east manchester multi modal strategy

semms

STOCKPORT METROPOLITAN BOROUGH COUNCIL · Cheshire East Council · MANCHESTER CITY COUNCIL

Jim McMahon BSc. C.Eng. MICE
SERVICE DIRECTOR, MAJOR PROJECTS

STOPFORD HOUSE
STOCKPORT SK1 3XE
TEL 0161 474
FAX : 0161

Job Title

A6 TO MANCHESTER AIRPORT RELIEF ROAD

Drawing Title

B006
HILL GREEN ACC'TION BRIDGE
GENERAL ARRANGEMENT

Drawn	Engineer	Checked	Approved
JMcC	NS	LF	NS
Date 23/12/11	Date DEC '11	Date DEC '11	Date DEC '11

Size	Scale
A1	AS SHOWN
SCG No.	Filename

Drawing No. 1007/3D/DF7/A6-MA/B006/706

Revision C